INSTALLATION GUIDE for AQUA-AIR WET/DRY

Model AA-250 AA-258 Built-in Total Cleaning Systems

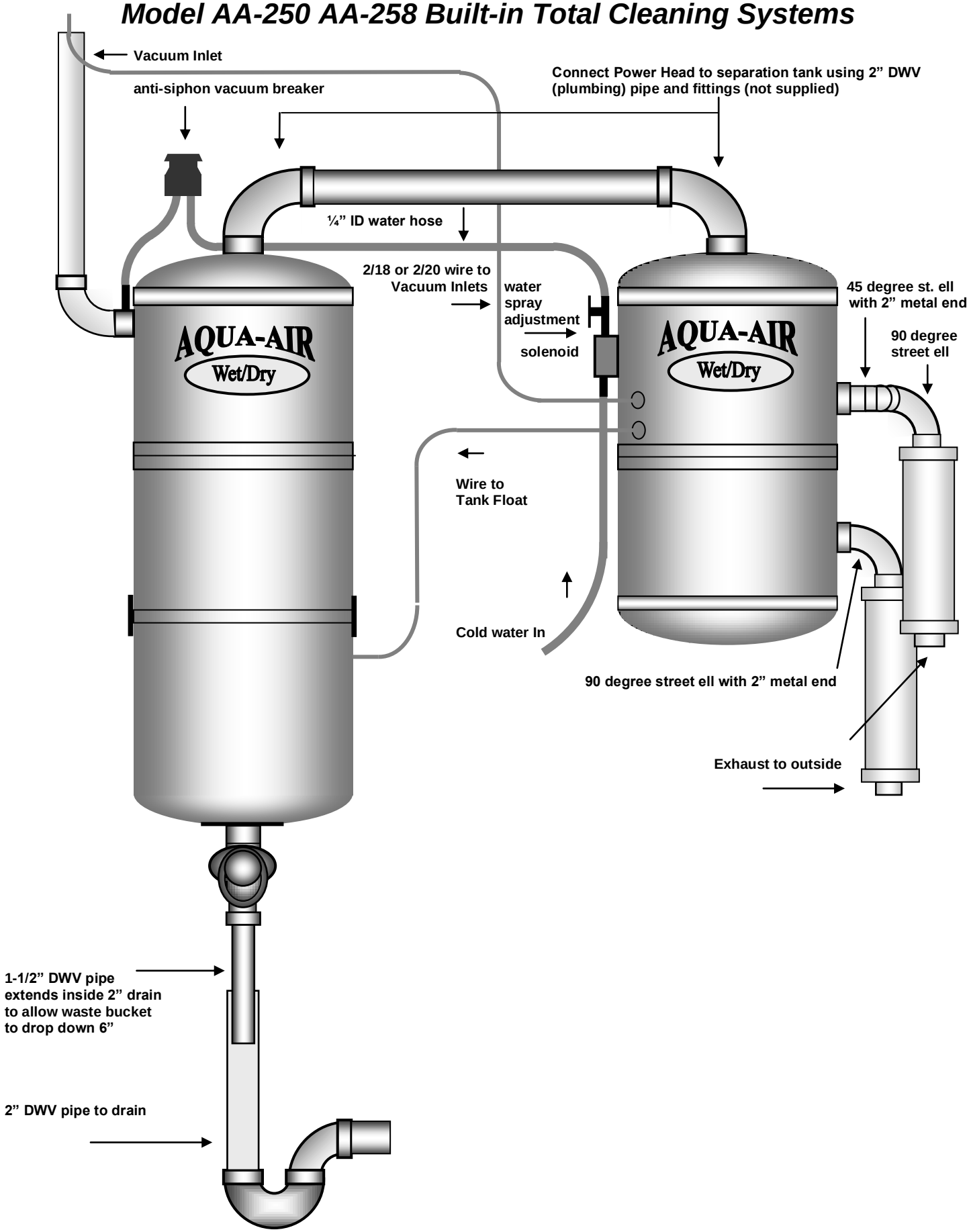

LOCATE the POWER UNIT in an area where it is protected from freezing. Before installation, assure that there is sufficient height 78" (2m), electrical power **(2 x 20 amp. 120 VAC)**, hot and cold water as well as a sanitary drain. Allow access to service and change debris screen.

POWER UNIT MOUNTING BOARDS: (included in shipping box) should be firmly attached to the wall. Power Unit may be mounted adjacent to Separation Tank or at another convenient location. To mount side by side and from the top center of the Power Unit Mounting Board allow 24” (610 mm) between boards, 12" (340 mm) from the ceiling, 18" (460mm) on each side and 57" (1450mm) down to the drain. Locate the separation tank mounting board 9-12” higher than the power Unit mounting board.

Minimum distances for mounting boards

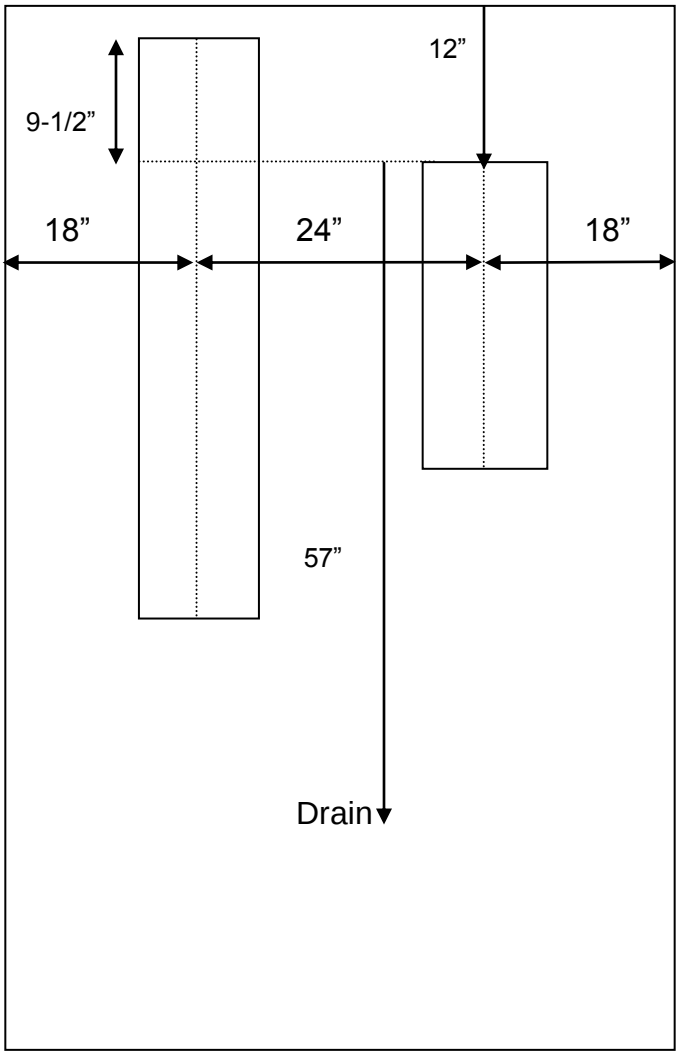

EXHAUST: Insert the 90 degree street ell with metal end (included) in Power Unit vacuum motor exhaust. The Exhaust Air should be vented to the outside using as direct a route as possible.

DRAIN to SANITARY SEWER: The Power Unit should be drained into a 2" DWV Stand Pipe connected via a P-trap to the sanitary sewer. Using Teflon tape or sealant on threads, thread the 1-1/2"ABS adapter into the bottom of the Power Unit. (Do Not Over Tighten)

Mount the FLAPPER VALVE at a 45 degree angle using the 1-1/2” 45 degree spigot elbow provided. Connect via another 1-1/2” 45 degree elbow to a 12" (300mm) piece of 1-1/2" DWV pipe extending down inside the 2"DWV Stand Pipe. Allow the Waste Tank to drop 6" (150mm) to service waste tank debris screen.

WATER SPRAY SOLENOID: (Located on left side of Power Unit) Connect to cold water faucet using fittings and hose supplied.

ADJUSTING the WATER SPRAY: The Volume of Cold Water sprayed into the Waste tank can be adjusted by the turning the handle of the needle valve located below the Solenoid clockwise to decrease flow.

By lowering the waste tank and starting the Power Unit the flow can be metered by placing a 4 cup (1 l.) measure under the cone to catch the water. Adjust to receive 9 cups (2 l.) per minute.

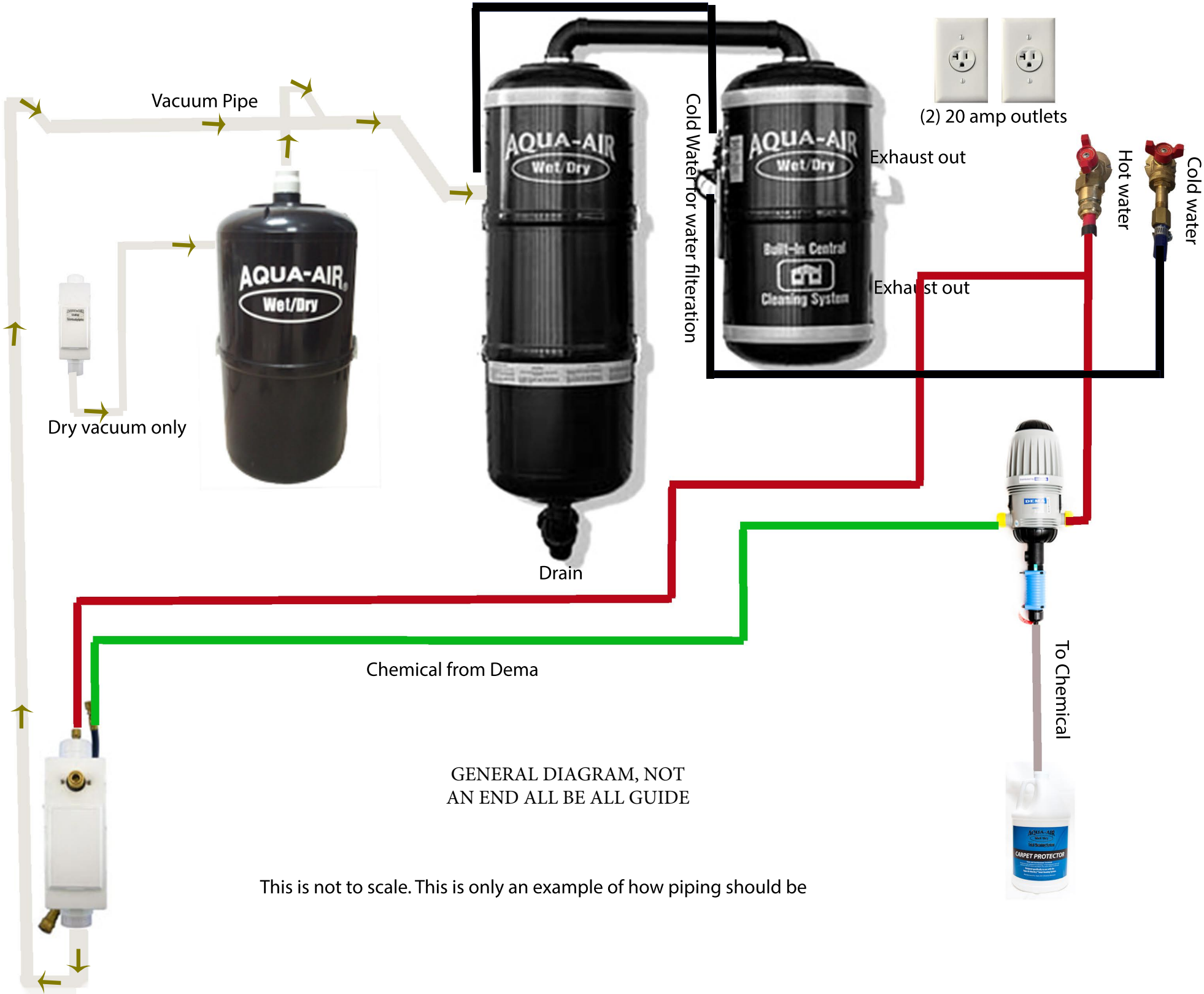
Vacuum Pipe
AQUA-AIR
Wet/Dry
Dry vacuum only
AQUA-AIR
Wet/Dry
Drain
Cold Water for water filteration
AQUA-AIR
Wet/Dry
Built-in Central
Cleaning System
Exhaust out
Exhaust out
(2) 20 amp outlets
Hot water
Cold water
Chemical from Dema
To Chemical
CARPET PROTECTOR
GENERAL DIAGRAM, NOT
AN END ALL BE ALL GUIDE
This is not to scale. This is only an example of how piping should be

BASIC WET/DRY INSTALL REQUIREMENTS

Must follow all guidelines when installing the Aqua Air Wet/Dry.
Please call with any question 1-800-916-5777

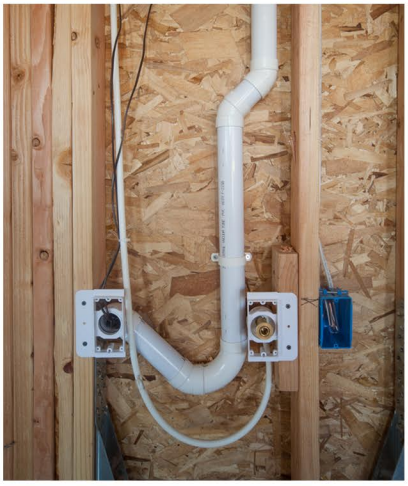

All wet/dry suction ports must have a p-trap. It can be done a few different ways. This is the most common. This prevents any left over moisture from coming out the wall. When running pex for water outlet make a loop just in case future repairs are needed

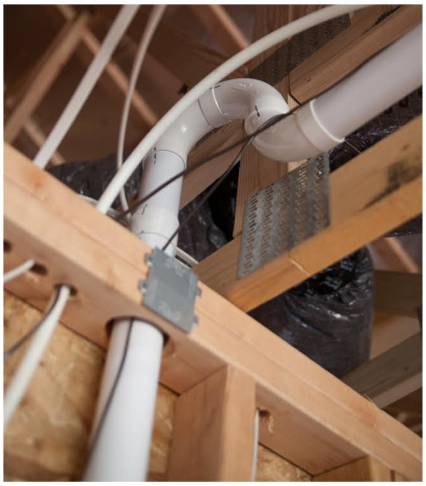

Every wet/dry port must have a high rise. This prevents any back flow from going down the pipe and out the wall.

When installing on an upper floor you will run the pipe straight down into top of the main line.

When you tie into the main line always come in from the top this prevents any flow by from going down each drop.

Every Wet/Dry will need at the location of the power unit a hot and cold water hook up with valve, dedicated 20 amp circuit, 2 inch drain located on lower wall and exhaust out.

Make sure all suction ports contain a p-trap style drop and a high rise on every drop and low voltage wire for communication.

Must cover all suction ports and water ports before Sheetrock so they remain clean. If water valves get dirty during Sheetrock they will have a chance of getting dirty and clogged resulting in a leak.

A Few Things to Read

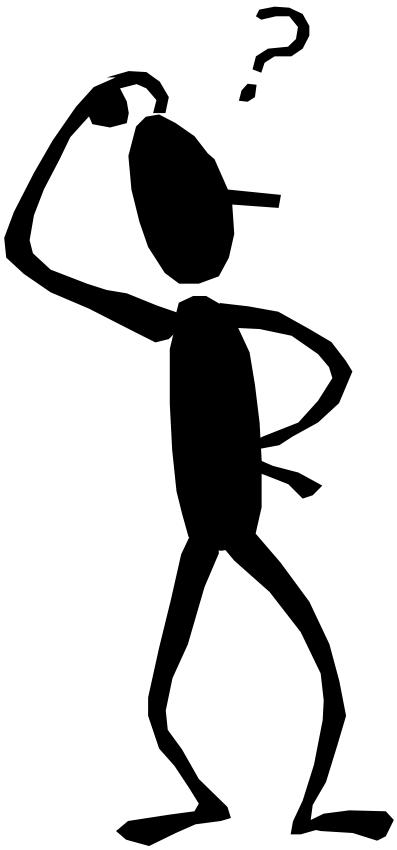

before you install your new

AQUA-AIR™

Wet/Dry

Built-In

Total Cleaning System

INSTALLATION GUIDE for AQUA-AIR WET/DRY

Built-in Total Cleaning Systems

LOCATE the POWER UNIT in an area where it is protected from freezing. Before installation, assure that there is sufficient height 78" (2m), electrical power (20 amp. 120 VAC per motor), hot and cold water as well as a sanitary drain. Allow access to service and change debris screen.

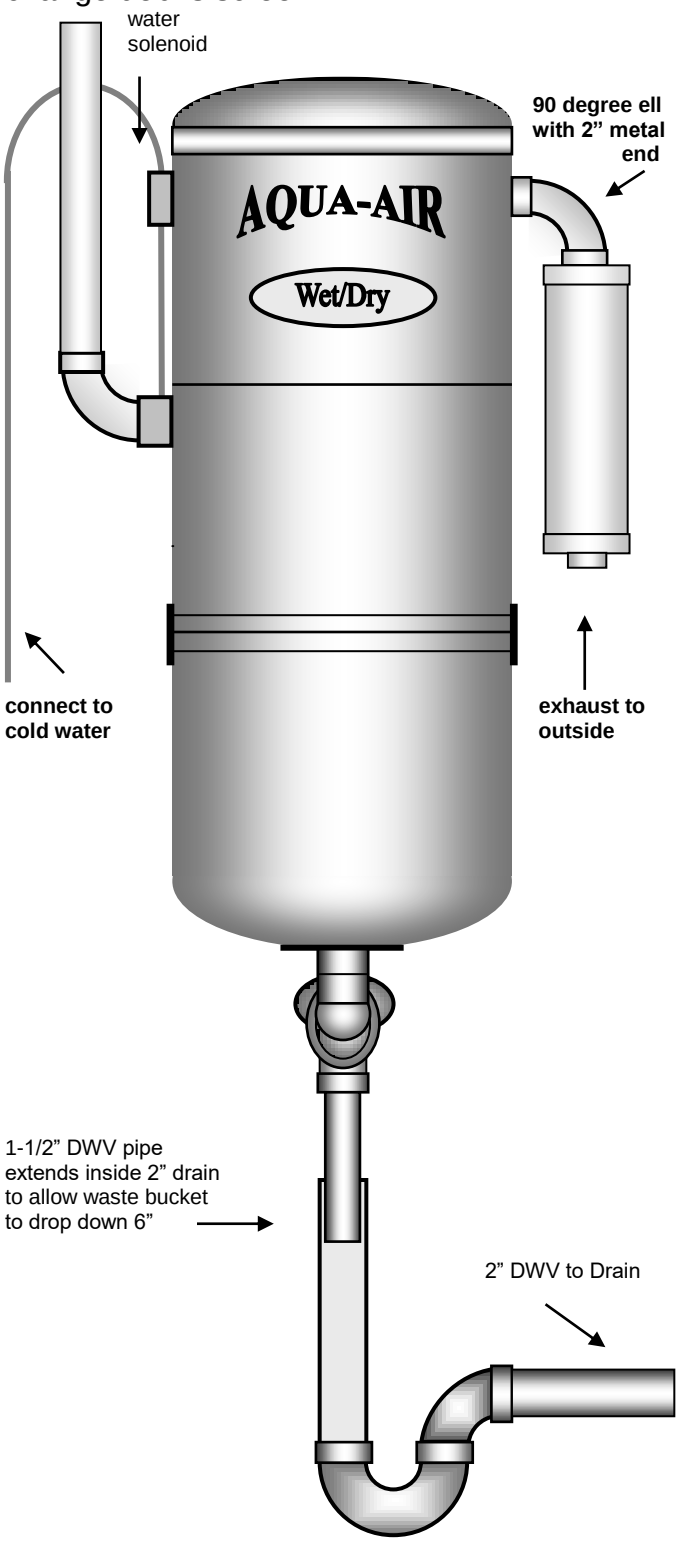

POWER UNIT MOUNTING BOARD: (included in shipping box) should be firmly attached to the wall. From the top center of the Mounting Board allow 20" (510 mm) from the ceiling, 18" (460mm) on each side and 57" (1450mm) down to the drain**.**

EXHAUST: Insert the 90 degree street ell with metal end (included) in Power Unit vacuum motor exhaust. The Exhaust Air should be vented to the outside using as direct a route as possible.

DRAIN to SANITARY SEWER: The Power Unit should be drained into a 2" DWV Stand Pipe connected via a P-trap to the sanitary sewer. Using Teflon tape or sealant on threads, thread the 1-1/2"ABS adapter into the bottom of the Power Unit. (Do Not Over Tighten)

Mount the FLAPPER (check) VALVE at a 45 degree angle using the 1-1/2" 45 degree spigot elbow provided. Connect via another 1-1/2" 45 degree elbow to a 12" (300mm) piece of 1-1/2" DWV pipe extending down inside the 2"DWV Stand Pipe. Allow the Waste Tank to drop 6" (150mm) to service waste tank debris screen.

WATER SPRAY SOLENOID: (Located on left side of Power Unit) Connect to cold water faucet using fittings and 1/4"ID Hose supplied.

ADJUSTING the WATER SPRAY: The Volume of Cold Water sprayed into the Waste tank can be adjusted by the turning the handle of the needle valve located below the Solenoid clockwise to decrease flow.

By lowering the waste tank and starting the Power Unit the flow can be metered by placing a 4 cup (1 l.) measure under the cone to catch the water. Adjust to receive 9 cups (2 l.) per minute.

INSTALLATION GUIDE for AQUA-AIR WET/DRY

Model AA-250 and AA-258 Built-in Total Cleaning Systems

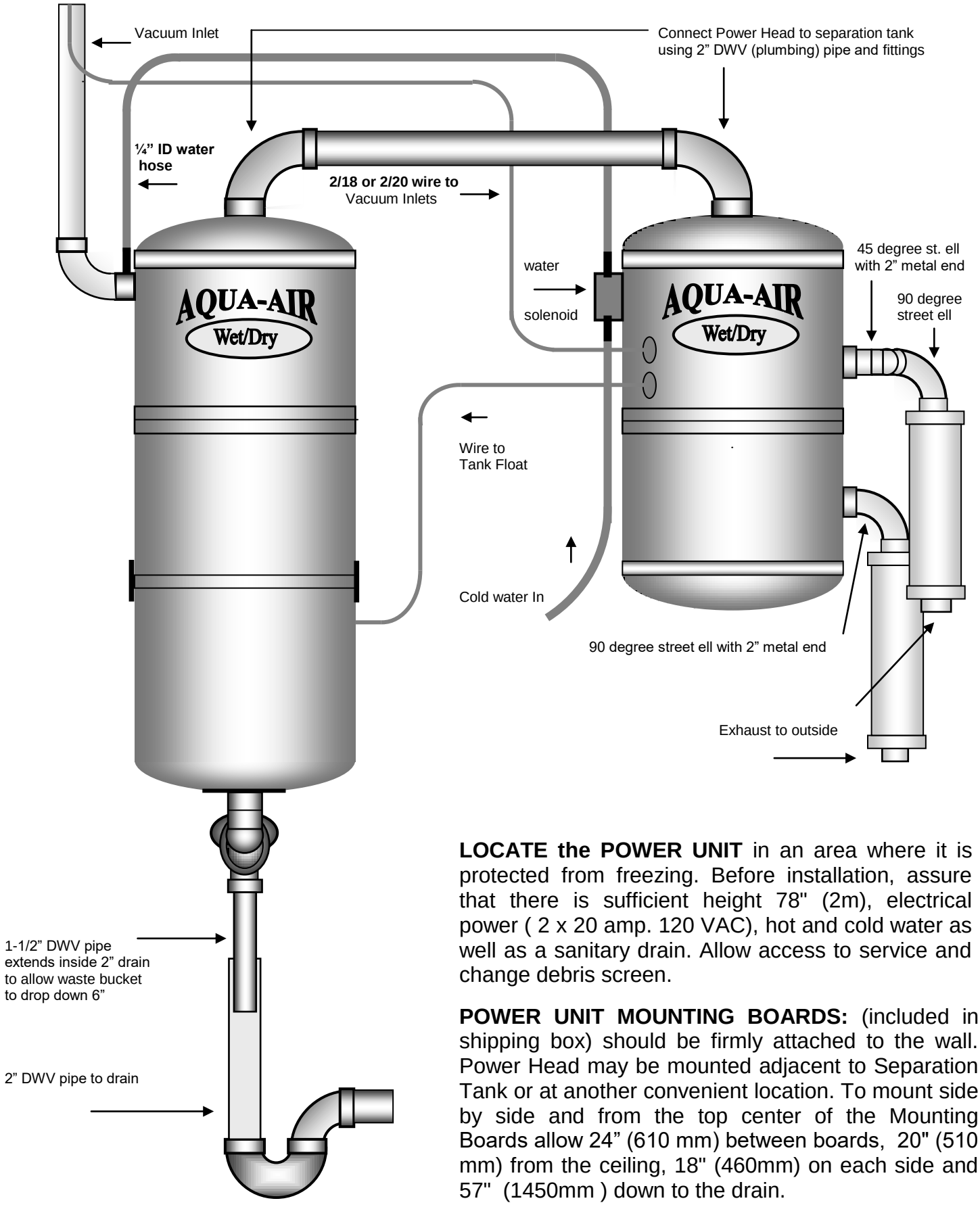

LOCATE the POWER UNIT in an area where it is protected from freezing. Before installation, assure that there is sufficient height 78" (2m), electrical power (2 x 20 amp. 120 VAC), hot and cold water as well as a sanitary drain. Allow access to service and change debris screen.

POWER UNIT MOUNTING BOARDS: (included in shipping box) should be firmly attached to the wall. Power Head may be mounted adjacent to Separation Tank or at another convenient location. To mount side by side and from the top center of the Mounting Boards allow 24" (610 mm) between boards, 20" (510 mm) from the ceiling, 18" (460mm) on each side and 57" (1450mm) down to the drain.

EXHAUST: Insert the 90 degree street ell with metal end (included) in Power Unit vacuum motor exhaust. The Exhaust Air should be vented to the outside using as direct a route as possible. Make sure if there are 2 exhausts on the power unit you run them separately.

DRAIN to SANITARY SEWER: The Power Unit should be drained into a 2" DWV Stand Pipe connected via a P-trap to the sanitary sewer. Using Teflon tape or sealant on threads, thread the 1-1/2"ABS adapter into the bottom of the Power Unit. (Do Not Over Tighten)

Mount the FLAPPER (check) VALVE at a 45 degree angle using the 1-1/2" 45 degree spigot elbow provided. Connect via another 1-1/2" 45 degree elbow to a 12" (300mm) piece of 1-1/2" DWV pipe extending down inside the 2"DWV Stand Pipe. Allow the Waste Tank to drop 6" (150mm) to service waste tank debris screen.

WATER SPRAY SOLENOID: (Located on left side of Power Unit) Connect to cold water faucet using fittings and 1/4"ID Braid Hose supplied.

ADJUSTING the WATER SPRAY: The Volume of Cold Water sprayed into the Waste tank can be adjusted by the turning the handle of the needle valve located below the Solenoid clockwise to decrease flow.

By lowering the waste tank and starting the Power Unit the flow can be metered by placing a 4 cup (1 l.) measure under the cone to catch the water. Adjust to receive 9 cups (2 l.) per minute.

Please contact us with any questions.
1-800-916-5777

INSTALLATION of the TUBING SYSTEM:

The Tubing System and the Water Line is routed either up to an attic or pipe chase, or down to the lower level or basement.

The **Water Line** should be ran next to the Power unit and connected to hot water shut off valve located by the cold water shut off valve for the water filtration.

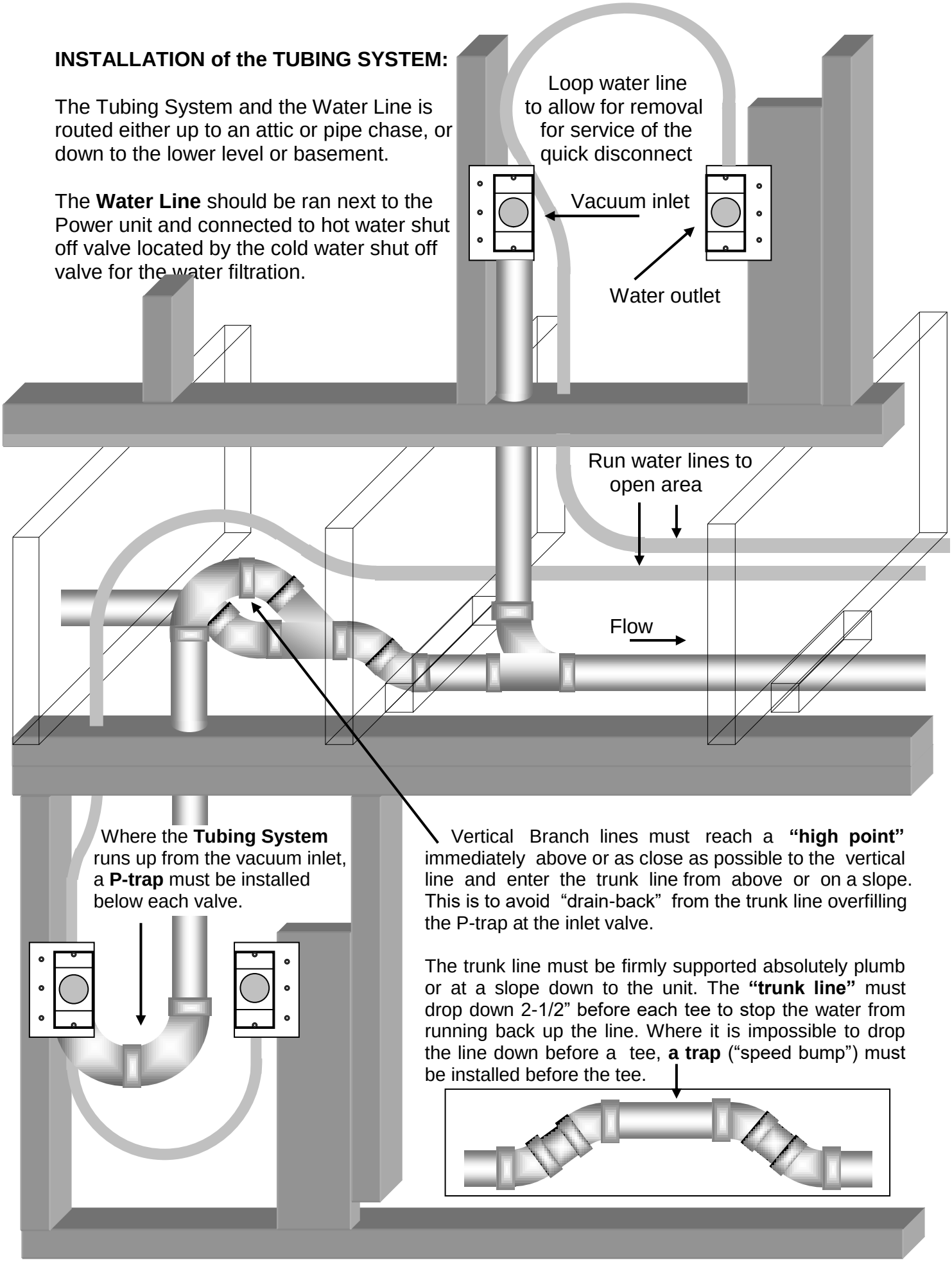

Where the **Tubing System** runs up from the vacuum inlet, a **P-trap** must be installed below each valve.

Vertical Branch lines must reach a **"high point"** immediately above or as close as possible to the vertical line and enter the trunk line from above or on a slope. This is to avoid "drain-back" from the trunk line overfilling the P-trap at the inlet valve.

The trunk line must be firmly supported absolutely plumb or at a slope down to the unit. The **"trunk line"** must drop down 2-1/2" before each tee to stop the water from running back up the line. Where it is impossible to drop the line down before a tee, **a trap** ("speed bump") must be installed before the tee.

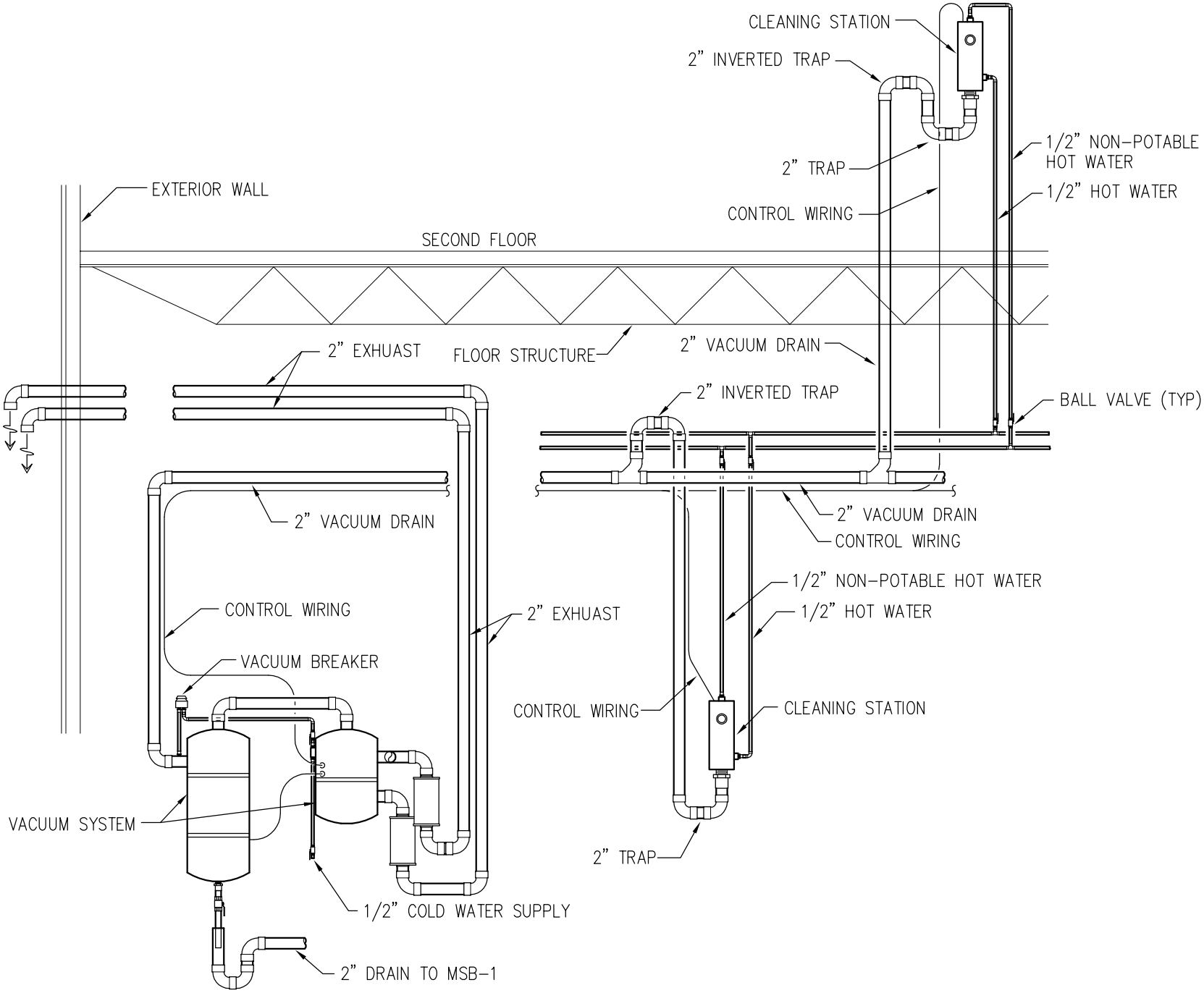

9
P5.0

WET/DRY CLEANING PIPING DETAIL

SCALE: NONE